THE ASSEMBLY DRAWINGS YOU HAVE RECEIVED ARE IN A GENERAL REFERENCE. OPTIONAL ACCESSORIES MAY NOT BE SHOWN AS PROVIDED. PLEASE REFER TO YOUR PURCHASE ORDER FOR A COMPLETE DESCRIPTION OF YOUR BOOTH ORDER.

APPROVAL DRAWING
MANUFACTURING WILL AWAIT APPROVAL
END USER SIGNATURE: _____
MOTOR SUPPLY VOLTAGE: _____
LIGHT SUPPLY VOLTAGE: _____
PLEASE SIGN THE APPROVAL DRAWING, MAKE ANY NOTES TO DRAWING THAT MAY AFFECT ORDER. NOTE: ANY CHANGES TO DRAWING MAY EFFECT CHARGES, DELAY APPROVAL PROCESS AND DELAY THE PRODUCTION OF YOUR ORDER.

VOLTAGE CONFIRMATION
MOTOR 460/3/60 VAC
LIGHTS 120/60 VAC
IF DIFFERENT, INDICATE BELOW
___/___/___ VAC
___/___/___ VAC

SEE ORDER ACKNOWLEDGEMENT FOR COMPLETE LIST OF PROVIDED STACK COMPONENTS

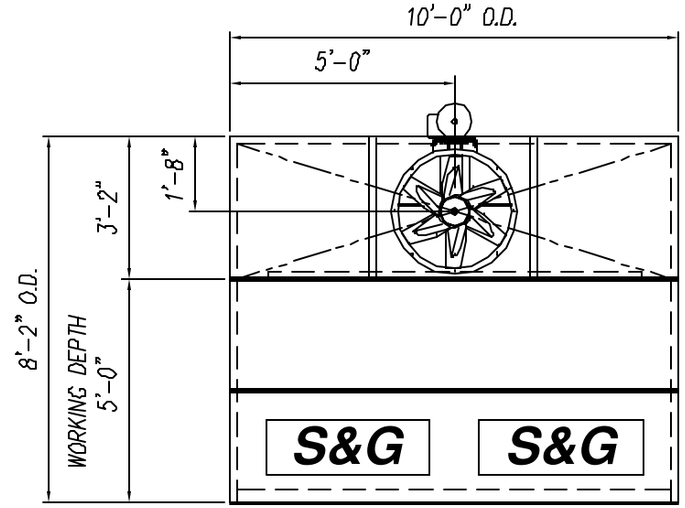

PLAN VIEW

30" DIA TUBEAXIAL FAN UNIT
RATED FOR 10,000 SCFM EXHAUST @ 1/2" SP; DRIVEN BY A 2 HP ODP TYPE MOTOR
2 H.P. 230/460/60/3 INDUCTION TYPE MOTOR. NEC-1999 SECTION 501-8-B

LIGHT FIXTURES, (2) SUPPLIED
FOUR TUBE 48"; 32 WATT FIXTURES MOUNTED BEHIND CLEAR TEMPERED GLASS PANES, "UL" RATED FOR THEIR INTENDED USE AND PLACEMENT, (2 S & G)

MANOMETER

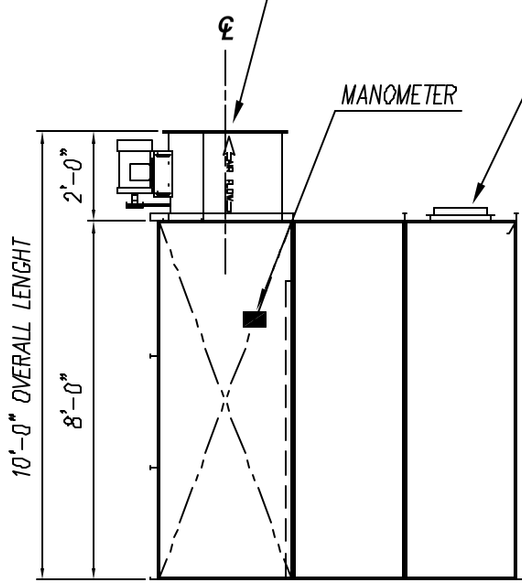

LEFT SIDE ELEVATION

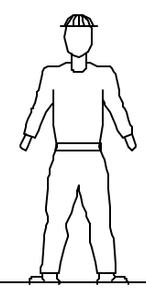

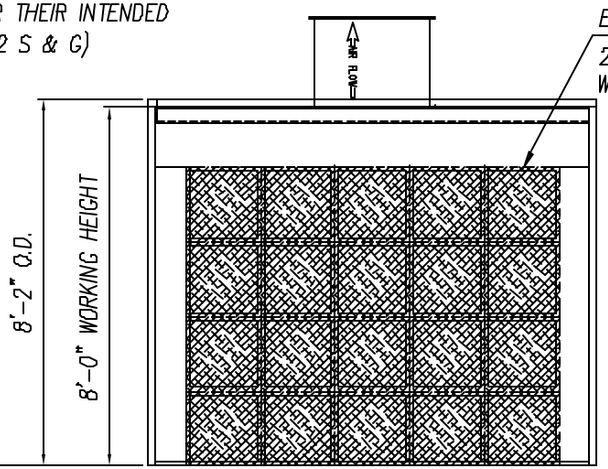

VIEW @ WORK AREA

EXHAUST FILTERS, (20) SUPPLIED
20" X 20" X 2" FILTERS WITH GRIDS

(20) # CLASS 2 OVERSPRAY COLLECTION FILTERS MOUNTED ON STEEL GRIDS. IFC-2000 SECTION 1504.3, SECTION 1504.3.1, AND SECTION 1504.3.2

COL-MET IB 1208-07 SPRAY BOOTH MFG. IN ACCORDANCE WITH IFC-2000 SECTION 1504.1.2.1 THROUGH 1504.1.2.2, SECTION 1504.2.3, SECTION 1504.2.5, SECTION 1504.2.7, SECTION 1504.3, SECTION 1504.3.1, SECTION 1504.3.2, AND NFPA-33

BOOTH WALLS & CEILING PANELS FABRICATED OF G-90, 18 GA. GALVANIZED STEEL IN ACCORDANCE WITH THE IFC-2000 SECTION 1504.1.2.1 & NFPA -33 CHAPTER 3.1

COMPRESSED AIR SOURCE INTERLOCKED TO EXHAUST FAN IFC-2000 SECTION 1504.2.1 NEC-1999 SECTION 516.2(2)B

REV. #	DESCRIPTION	BY:	DATE

COL-MET spray booths

O.T.

NTS

IB-1008-05

111-1008-05-01-01

1 2