THE ASSEMBLY DRAWINGS YOU HAVE RECEIVED ARE IN A GENERAL REFERENCE. OPTIONAL ACCESSORIES MAY NOT BE SHOWN AS PROVIDED. PLEASE REFER TO YOUR PURCHASE ORDER FOR A COMPLETE DESCRIPTION OF YOUR BOOTH ORDER.

SEE ORDER ACKNOWLEDGEMENT FOR COMPLETE LIST OF PROVIDED STACK COMPONENTS

18 GA GALV. STL SHELL

APPROVAL DRAWING

MANUFACTURING WILL AWAIT APPROVAL

END USER SIGNATURE: _____

MOTOR SUPPLY VOLTAGE: _____

LIGHT SUPPLY VOLTAGE: _____

PLEASE SIGN THE APPROVAL DRAWING, MAKE ANY NOTES TO DRAWING THAT MAY AFFECT ORDER. NOTE: ANY CHANGES TO DRAWING MAY EFFECT CHARGES, DELAY APPROVAL PROCESS AND DELAY THE PRODUCTION OF YOUR ORDER .

VOLTAGE CONFIRMATION

MOTOR 460/3/60 VAC

LIGHTS 120/60 VAC

IF DIFFERENT, INDICATE BELOW

_____ / _____ / _____ VAC

_____ / _____ / _____ VAC

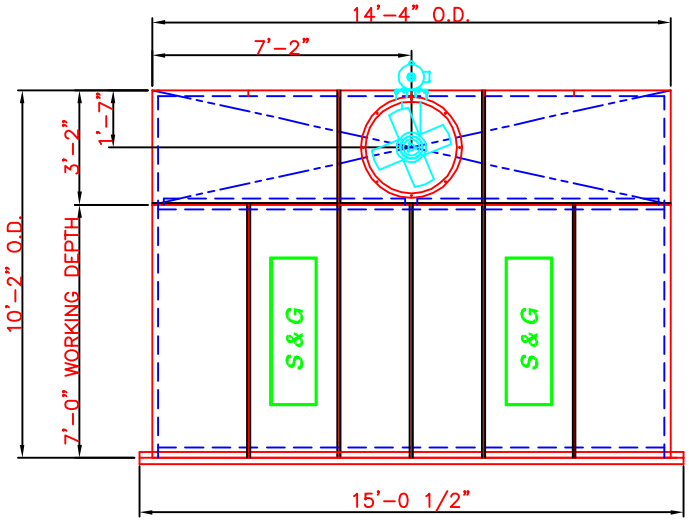

PLAN VIEW

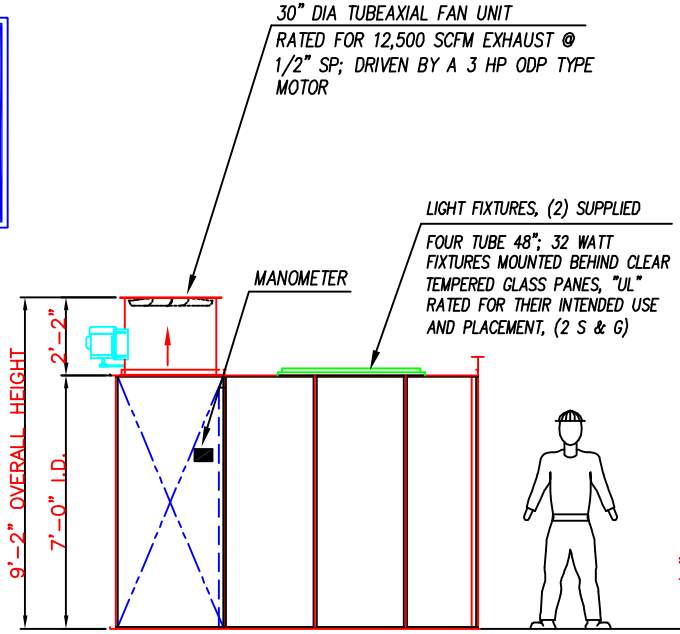

LEFT SIDE ELEVATION

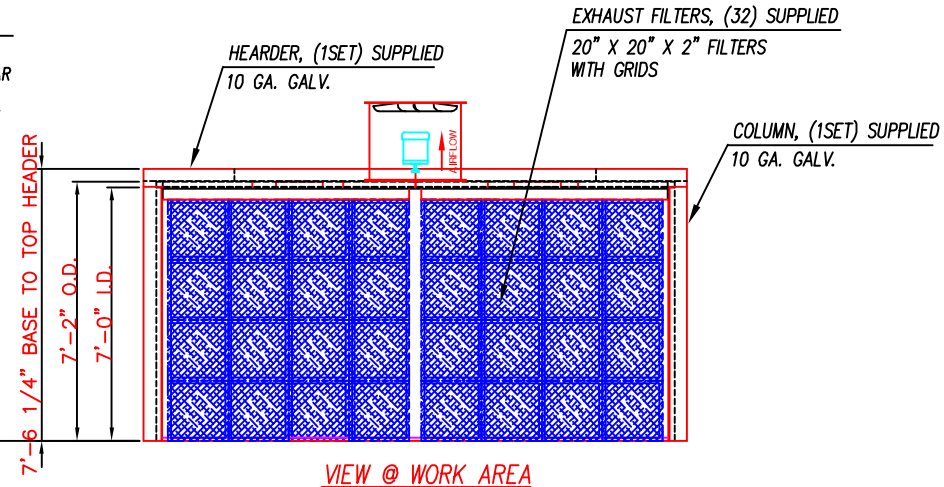

VIEW @ WORK AREA

COL-MET IB 1407-07 SPRAY BOOTH MFG. IN ACCORDANCE WITH IFC-2000 SECTION 1504.1.2.1 THROUGH 1504.1.2.2, SECTION 1504.2.3, SECTION 1504.2.5, SECTION 1504.2.7, SECTION 1504.3, SECTION 1504.3.1, SECTION 1504.3.2, AND NFPA-33

REV. #	DESCRIPTION	BY:	DATE

DESIGNED BY
DRAWN BY
CHECKED BY O.T.
DATE
SCALE NTS
APPROVED BY

COL-MET spray booths

CUSTOMER
PROJECT
TITLE IB-1407-07
JOB NO.
DWG. NO. 111-1407-07-01-01
SHEET 1 OF 2