T:\Engineering\B.I.N. (BOOTH I.D. NUMBER)\111-IB INDUSTRIAL BOOTH\111-1208-07-01-01R.dwg, 7/1/2004 8:30

THE ASSEMBLY DRAWINGS YOU HAVE RECEIVED ARE IN A GENERIC FORMAT. OPTIONAL ASSESSORIES MAY NOT BE SHOWN AS PROVIDED. PLEASE REFER TO YOUR PURCHASE ORDER FOR A COMPLETE DESCRIPTION OF YOUR BOOTH ORDER.

18 GA GALV. STL SHELL
PRIME QUALITY G90

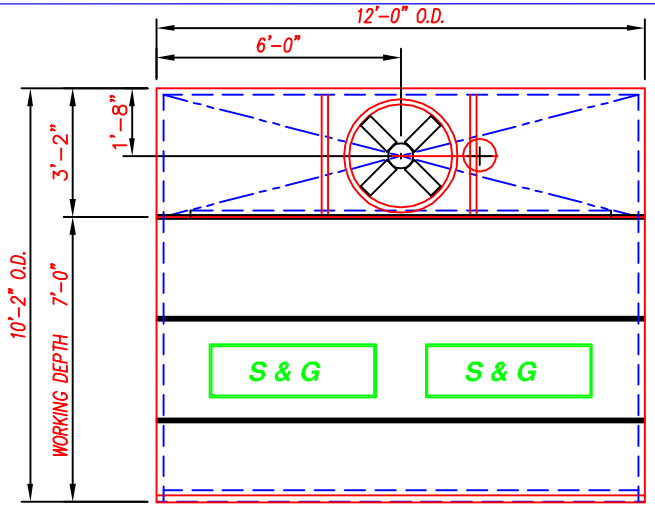

PLAN

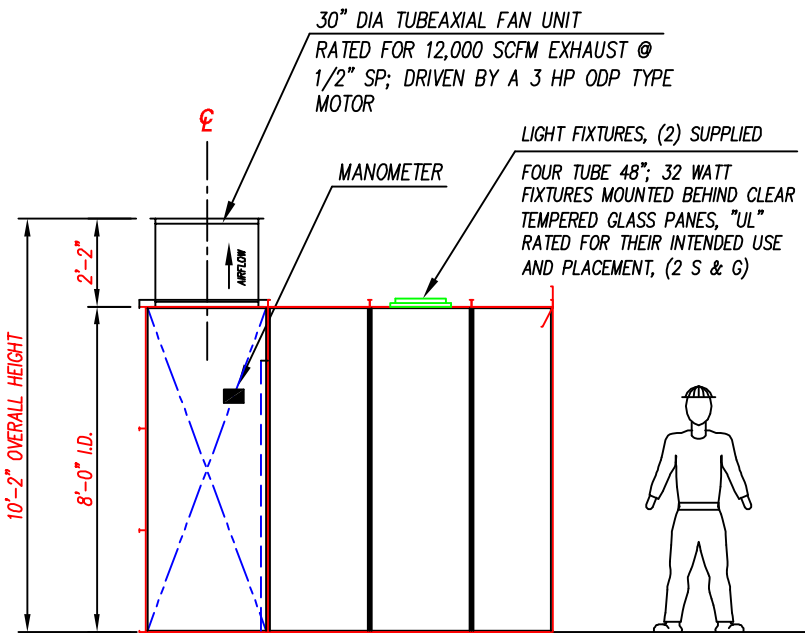

LEFT SIDE ELEVATION

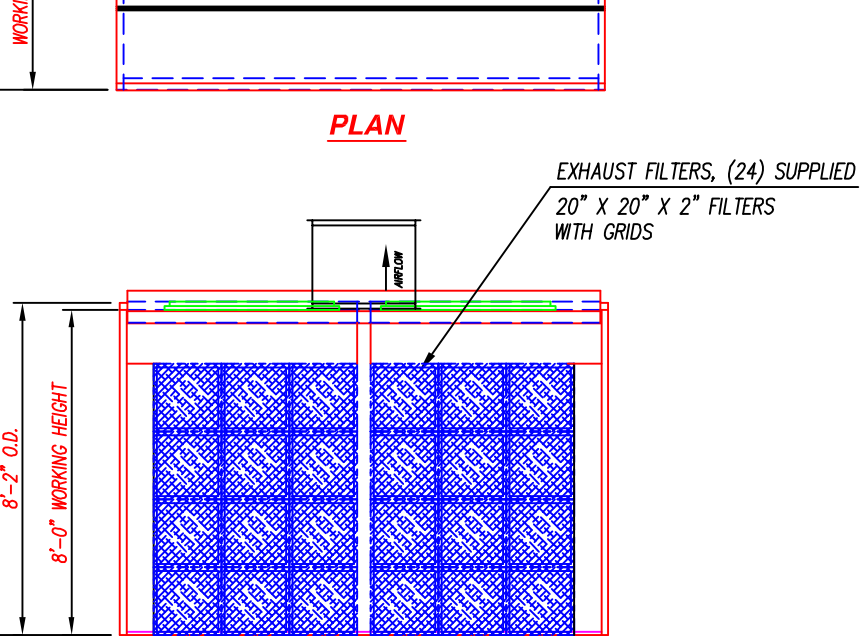

VIEW @ WORK AREA

REV. #	DESCRIPTION	BY:	DATE

DESIGNED BY
DRAWN BY S.K.
CHECKED BY C.T.
DATE 06-15-04
SCALE NTS
APPROVED BY

COL-MET spray booths

CUSTOMER OPEN FRONT INDUSTRIAL BOOTH
PROJECT
TITLE IB-1208-07
JOB NO.
DWG. NO. 111-1208-07-01-01
SHEET 1 OF 2