THE ASSEMBLY DRAWINGS YOU HAVE RECEIVED ARE IN A GENERIC FORMAT. OPTIONAL ACCESSORIES MAY NOT BE SHOWN AS PROVIDED. PLEASE REFER TO YOUR PURCHASE ORDER FOR A COMPLETE DESCRIPTION OF YOUR BOOTH ORDER.

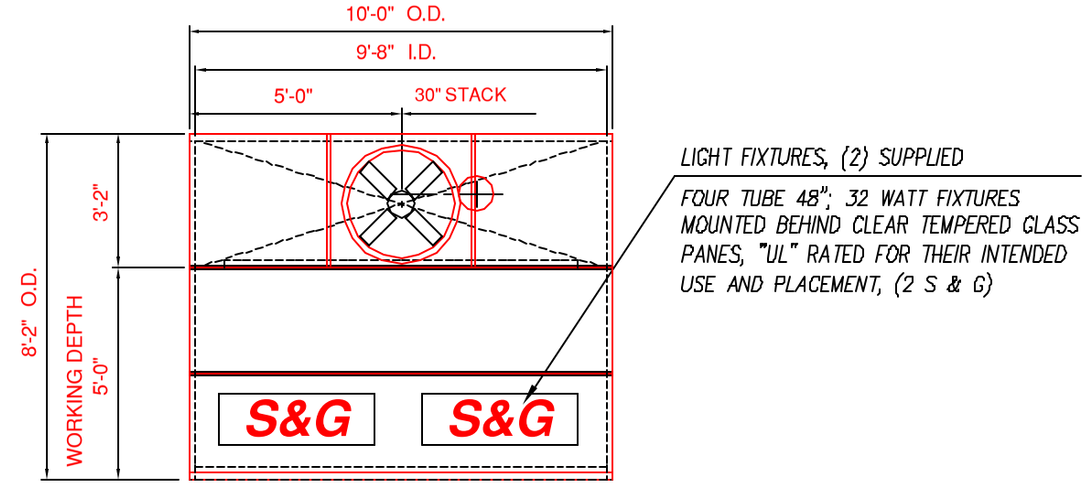

PLAN VIEW

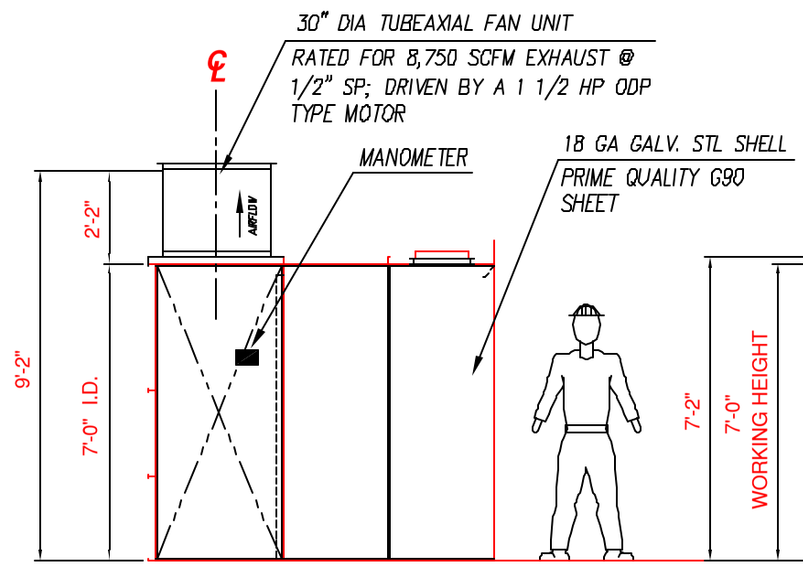

LEFT SIDE ELEVATION

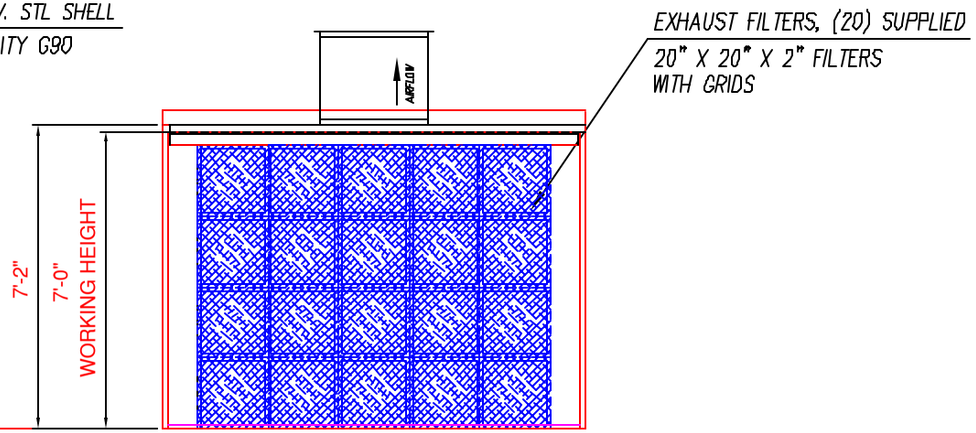

VIEW @ WORK AREA

REV. #	DESCRIPTION	BY:	DATE

COL-MET spray booths

O.T.

NTS

IB-1007

111-1007-05-01-01

1 2