THE ASSEMBLY DRAWINGS YOU HAVE RECEIVED ARE IN A GENERIC FORMAT. OPTIONAL ASSESSORIES MAY NOT BE SHOWN AS PROVIDED. PLEASE REFER TO YOUR PURCHASE ORDER FOR A COMPLETE DESCRIPTION OF YOUR BOOTH ORDER.

APPROVAL DRAWING
MANUFACTURING WILL AWAIT APPROVAL
END USER SIGNATURE: _____
SUPPLY VOLTAGE: _____

18 GA GALV. STL SHELL
PRIME QUALITY G90

SEE ORDER ACKNOWLEDGEMENT FOR COMPLETE LIST OF PROVIDED STACK COMPONENTS

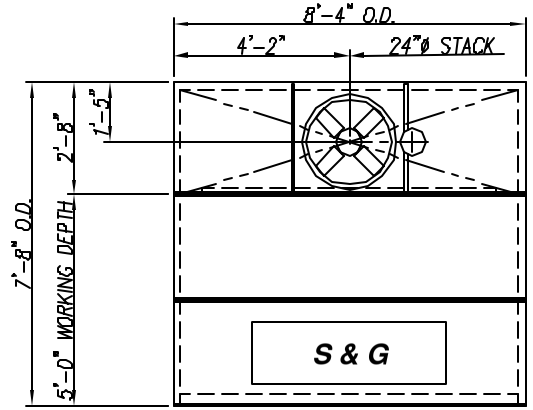

PLAN

24"Ø TUBEAXIAL FAN UNIT
RATED FOR 7,000 SCFM EXHAUST @ 1/2" SP; DRIVEN BY A 2 HP ODP TYPE MOTOR

MANOMETER

LIGHT FIXTURES, (1) SUPPLIED
FOUR TUBE 48"; 32 WATT FIXTURES MOUNTED BEHIND CLEAR TEMPERED GLASS PANES, "UL" RATED FOR THEIR INTENDED USE AND PLACEMENT, (1 S & G)

EXHAUST FILTERS, (16) SUPPLIED
20" X 20" X 2" FILTERS WITH GRIDS

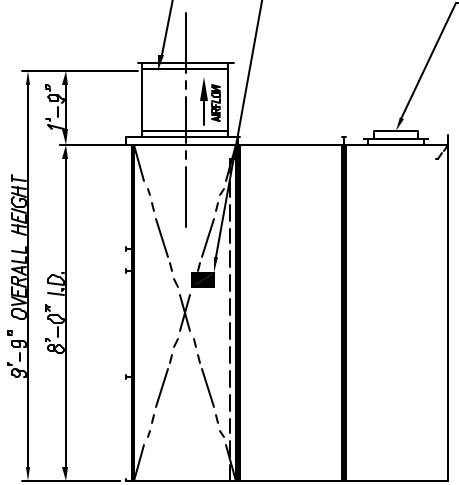

LEFT SIDE ELEVATION

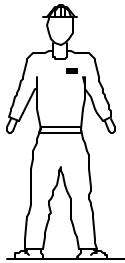

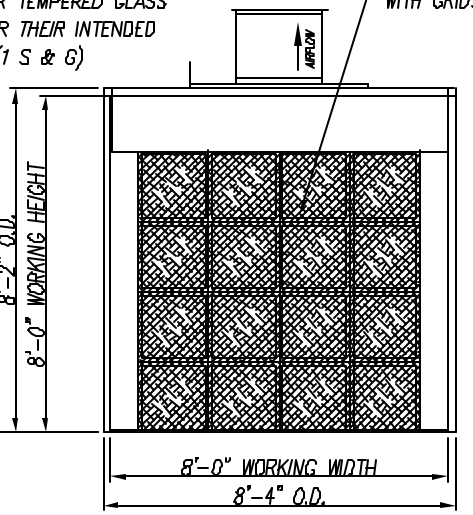

VIEW @ WORK AREA

REV.#	DESCRIPTION	BY:	DATE

COL-MET spray booths

D.T.

NOT

ID-0808-05

111-0808-05-01-01

1 2