THE ASSEMBLY DRAWINGS YOU HAVE RECEIVED ARE IN A GENERIC FORMAT. OPTIONAL ACCESSORIES MAY NOT BE SHOWN AS PROVIDED. PLEASE REFER TO YOUR PURCHASE ORDER FOR A COMPLETE DESCRIPTION OF YOUR BOOTH ORDER.

**APPROVAL DRAWING**
MANUFACTURING WILL AWAIT APPROVAL
END USER SIGNATURE: _____
SUPPLY VOLTAGE: _____

18 GA GALV. STL SHELL

PRIME QUALITY G90

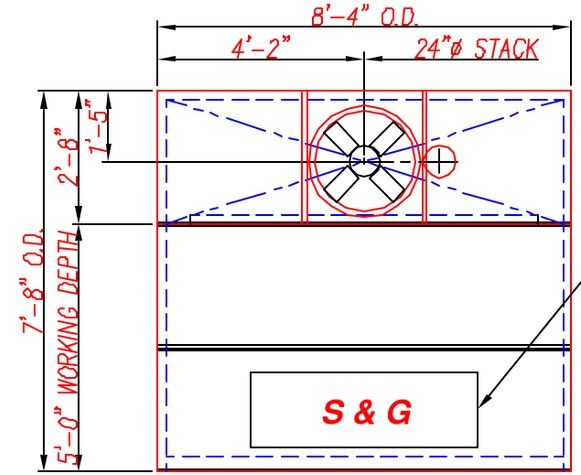


LIGHT FIXTURES, (1) SUPPLIED

FOUR TUBE 48"; 32 WATT FIXTURES MOUNTED BEHIND CLEAR TEMPERED GLASS PANES, "UL" RATED FOR THEIR INTENDED USE AND PLACEMENT, (1 S & G)

**PLAN**

24" DIA TUBEAXIAL FAN UNIT

RATED FOR 7,000 SCFM EXHAUST @ 1/2" SP; DRIVEN BY A 1 1/2 HP ODP TYPE MOTOR

MANOMETER

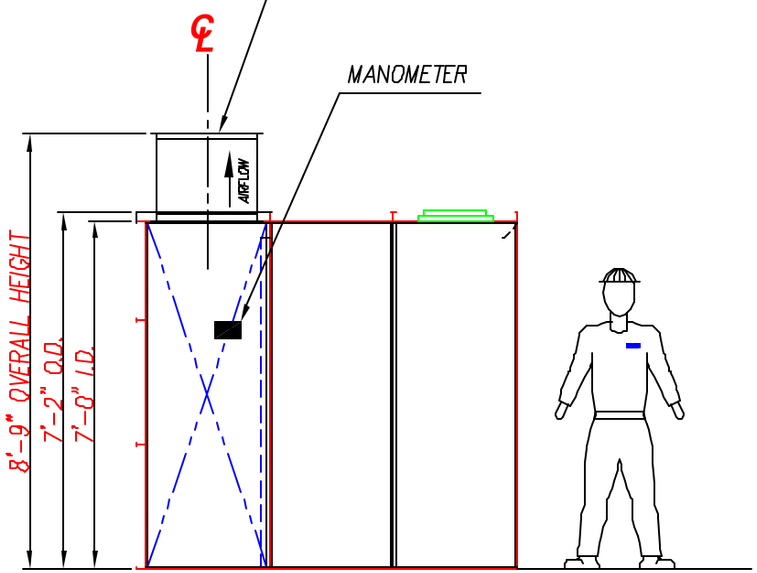


**LEFT SIDE ELEVATION**

EXHAUST FILTERS, (16) SUPPLIED

20" X 20" X 2" FILTERS WITH GRIDS

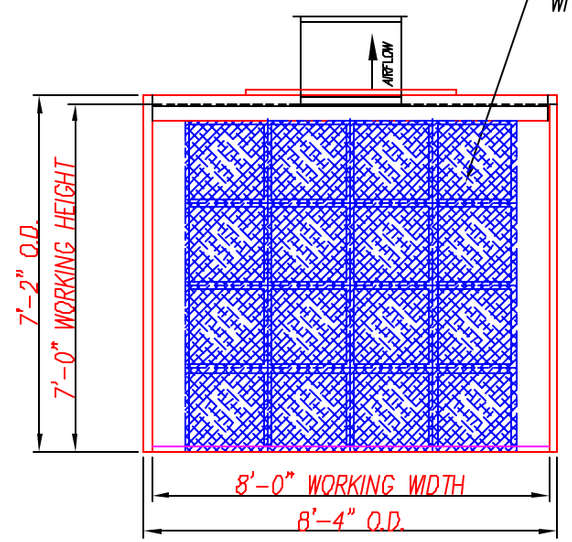


**VIEW @ WORK AREA**

| REV. # | DESCRIPTION | BY: | DATE |
|---|---|---|---|
| | | | |

COL-MET spray booths

NTS

IB-0807-05

111-0807-05-01-01