THE ASSEMBLY DRAWINGS YOU HAVE RECEIVED ARE IN A GENERIC FORMAT. OPTIONAL ACCESSORIES MAY NOT BE SHOWN AS PROVIDED. PLEASE REFER TO YOUR PURCHASE ORDER FOR A COMPLETE DESCRIPTION OF YOUR BOOTH ORDER.

18 GA GALV. STL SHELL

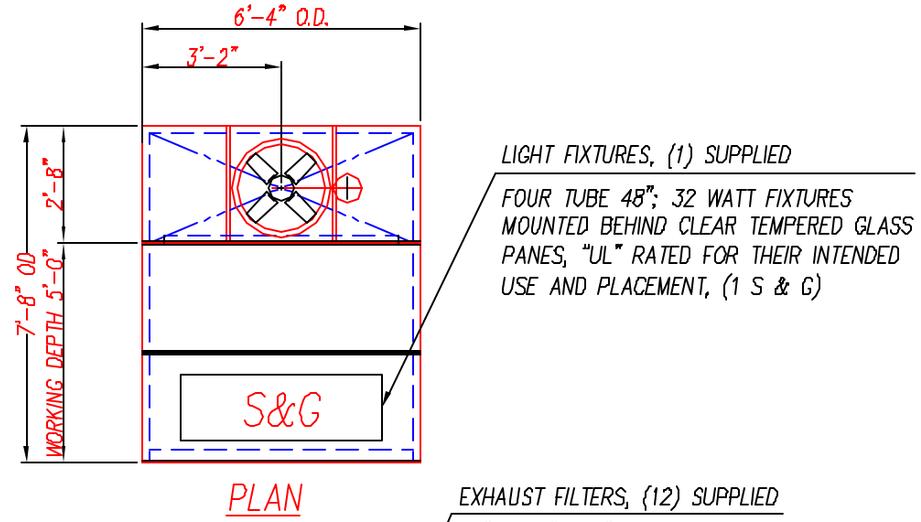

PLAN

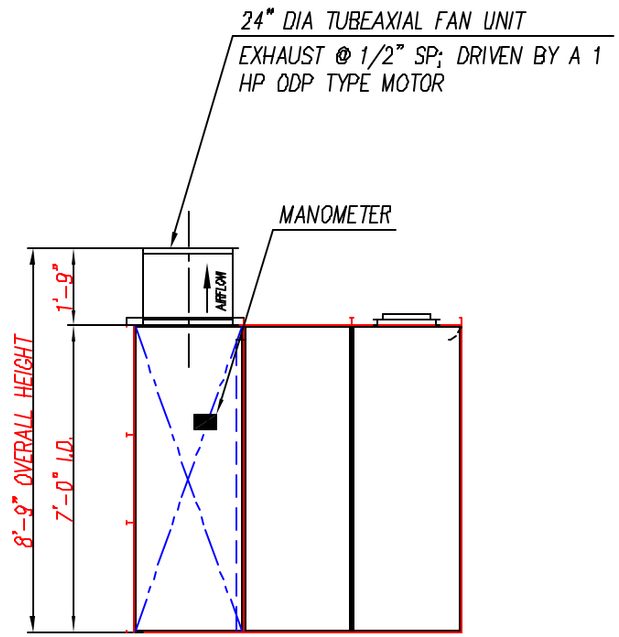

LEFT SIDE ELEVATION

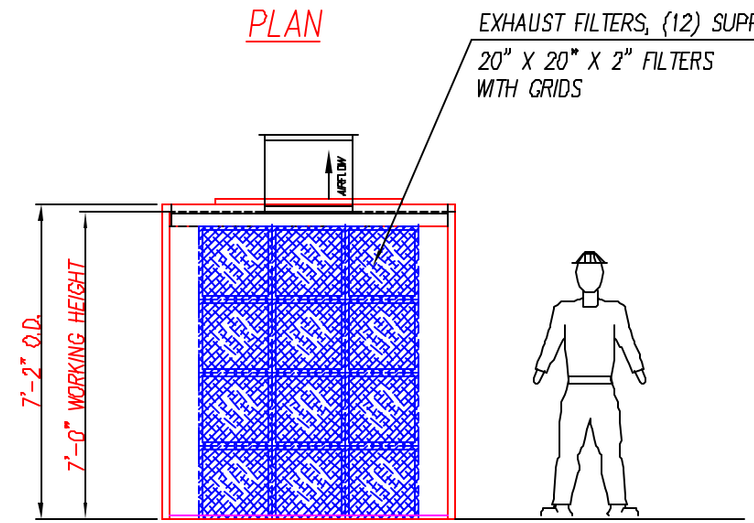

VIEW @ WORK AREA

REV. #	DESCRIPTION	BY:	DATE

COL-MET spray booths

STANDARD

OT

10-26-04

NTS

IB-0607-05-01-01

N/A

111-0607-05-01-01

1 2