THE ASSEMBLY DRAWINGS YOU HAVE RECEIVED ARE IN A GENERIC FORMAT. OPTIONAL ACCESSORIES MAY NOT BE SHOWN AS PROVIDED. PLEASE REFER TO YOUR PURCHASE ORDER FOR A COMPLETE DESCRIPTION OF YOUR BOOTH ORDER.

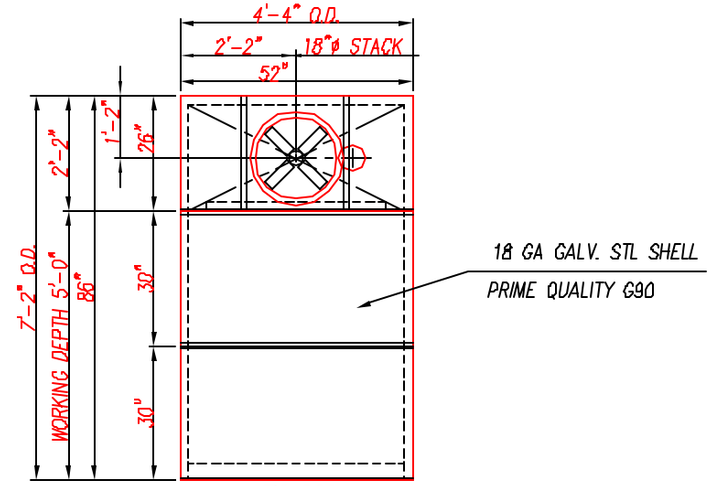

PLAN

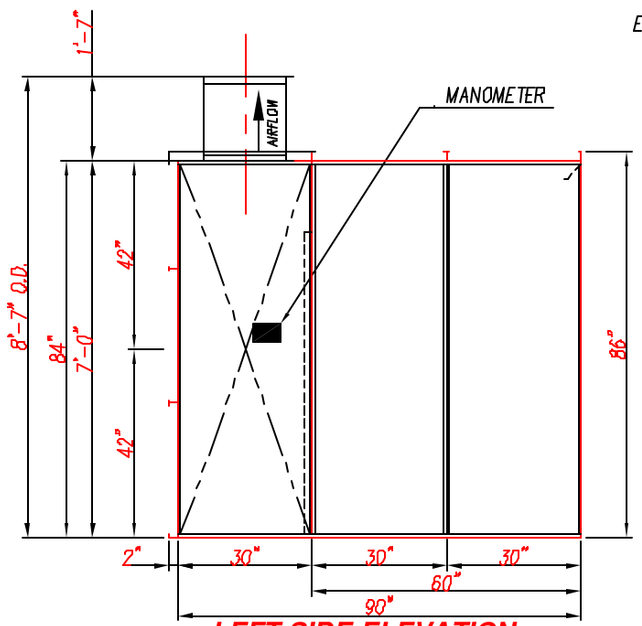

LEFT SIDE ELEVATION

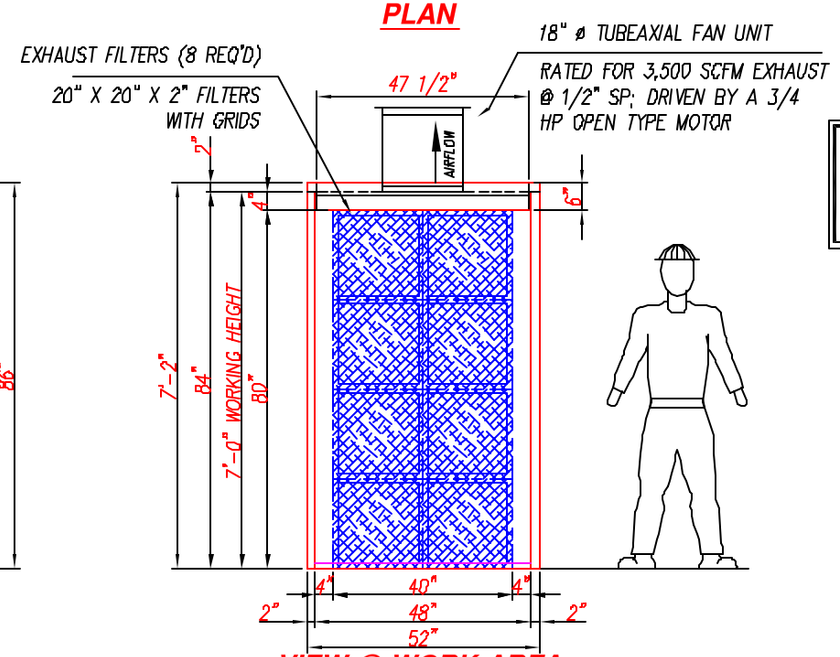

VIEW @ WORK AREA

APPROVAL DRAWING
MANUFACTURING WILL AWAIT APPROVAL
END USER SIGNATURE: _____
SUPPLY VOLTAGE: _____

REV. #	DESCRIPTION	BY:	DATE

COL-MET spray booths

NTS